CAD FILE:

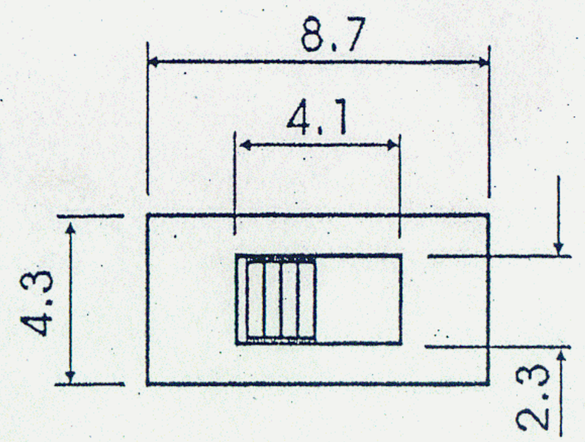

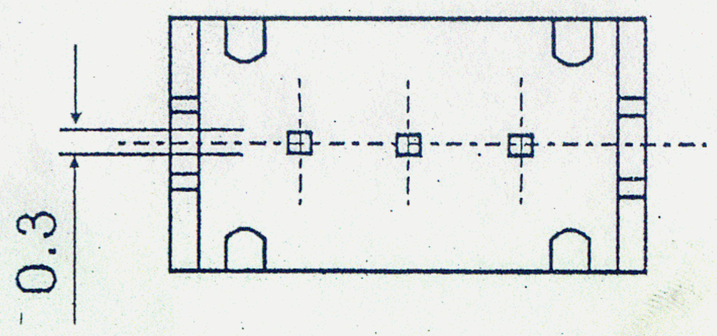

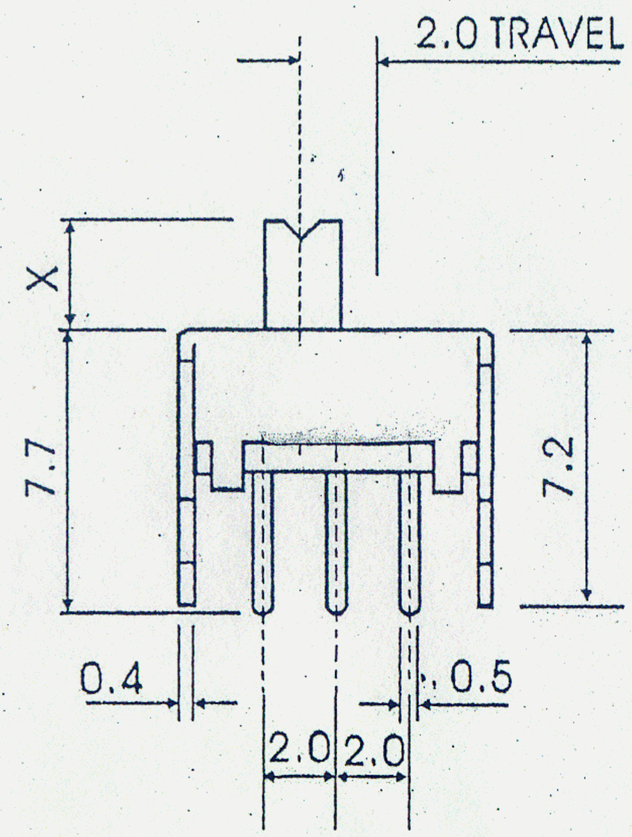

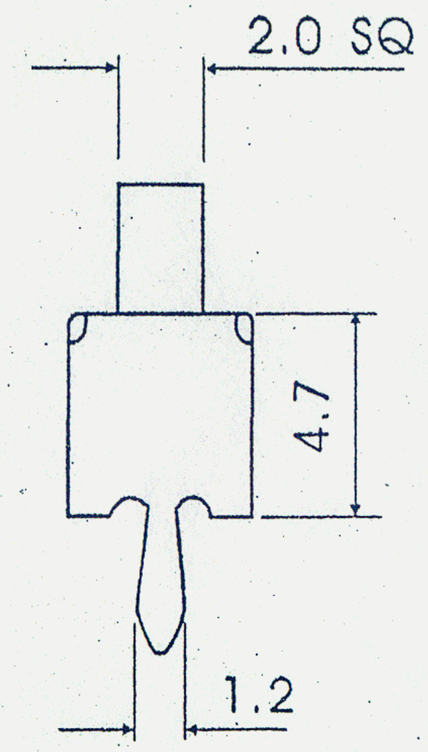

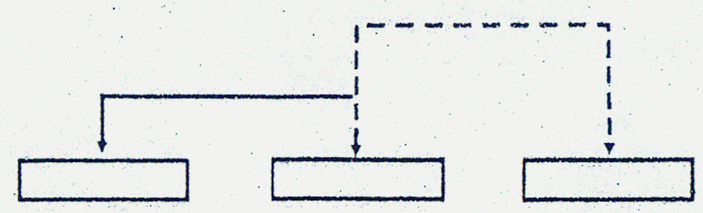

OPTIONAL KNOB:
VG 2-9
EG2-9

NO.	PART NAME	MATERIAL	Q'TY	FINISHING
8				
7				
6				
5	SPRING	SUS	1	TEMPER
4	CAM STICK	SUS	1	NATURAL
3	INSERT CASE	NYLON+F.G/BRASS STRIP	1	GREY/Ag PLATED OVER Ni PLATED
2	COVER	POM	1	BLACK/WHITE
1	INSERT KNOB	POM/PBS C5210R-EH	1	WHITE/Ag CLAD

TOLERANCE UNLESS SPECIFIED

WITHIN: 1.5mm±0.1mm
OVER : 1.5mm±0.2mm

ISSUE	DATE	DESCRIPTIONS	APPD.

TITLE : Slide Switch

UNIT :MM

DRWG NO.:

MODEL: SS-12D07(1P2T)

SCALE:5:1

DWN

CHK'D

APPD.

Tongye Electronic Co., Ltd.